CAD FILE:

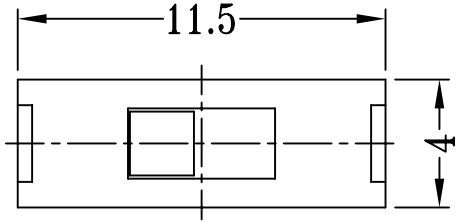

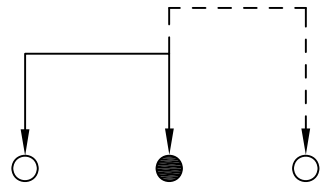

SCHEMATIC(SHORTING)

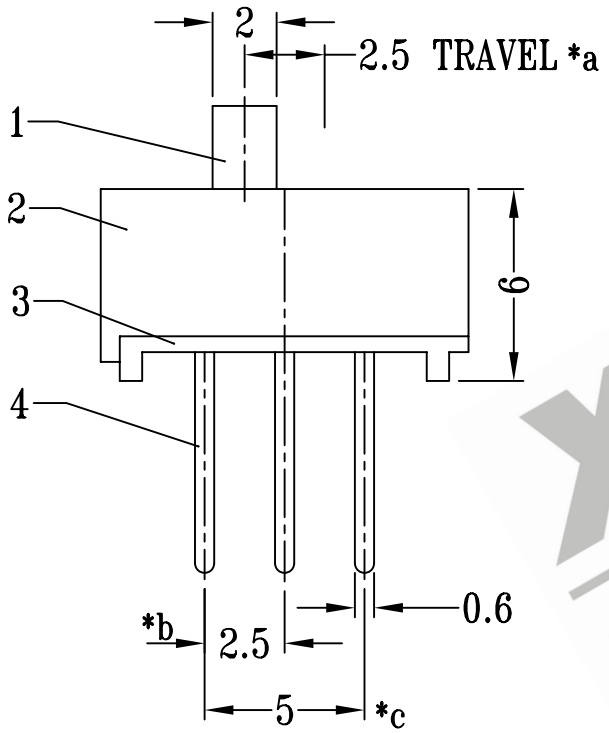

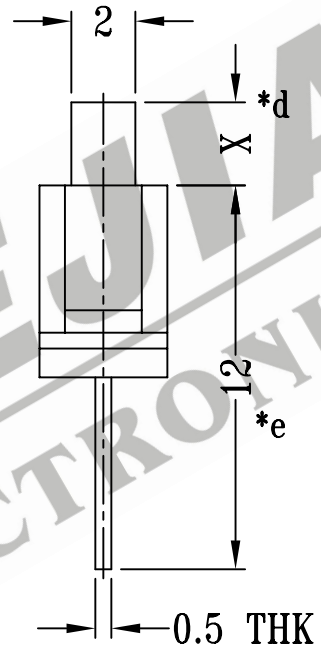

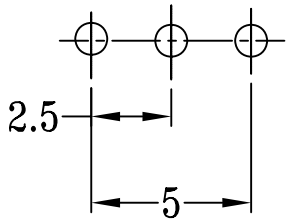

P.C.BLAYOUT

XIEJIA ELECTRONICS

注:带"*"表示关键尺寸(5个)

NO.	PART NAME	MATERIAL	Q'TY	FINISHING
8				
7				
6				
5	CONTACT CLIP	PBS	1	Ag CLAD
4	TERMINAL	BRASS STRIP	3	Ag PLATED OVER Ni PLATED
3	BASE	POM	1	BLACK
2	COVER	POM	1	BLACK
1	KNOB	POM	1	BLACK/GREY

TOLERANCE UNLESS SPECIFIED
WITHIN: 1.5±0.1mm
OVER : 1.5±0.2mm

SHENZHEN XIEJIA ELECTRONICS CO.,LTD.

ISSUE	DATE	DESCRIPTIONS	APPD.

TITLE : VERTICAL SLIDE SWITCH

UNIT : MM

DRWG NO.: XJ-DR-SS12E01-00

MODEL: SS-12E01

SCALE: 4:1

ALL MATERIALS MUST BE COMPLIANT TO ROHS

DWN.	ZHOUYU	2002-3-8
CHK'D	FANGYING	2002-3-8
APPD.	KANGXINAN	2002-3-8